VIVA

Direct Silk Screen Deco Artwork Template

Jar Size: 50ml
Label Size: 7.008” x 1.024” [178.00mm x 26.00mm]

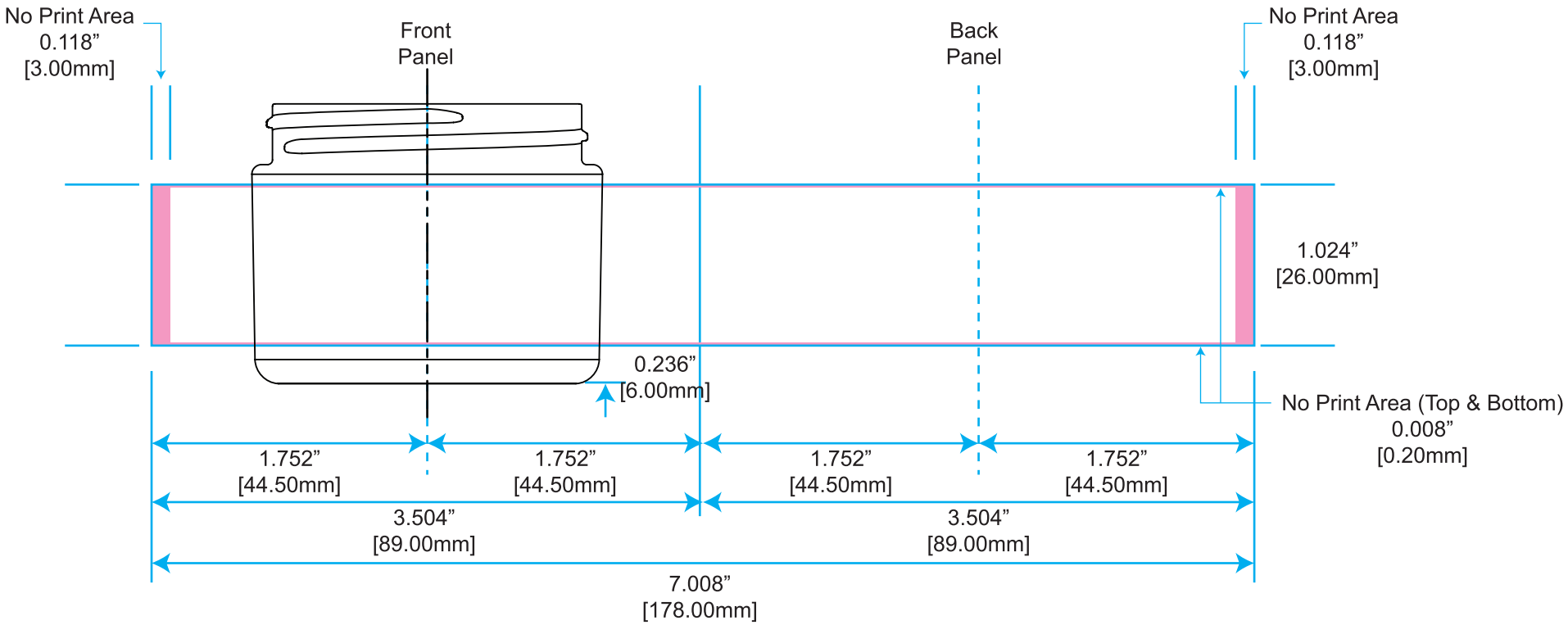

No Print Area

19/09/2025